Please check the examination details below before entering your candidate information

| Candidate surname | Other names |
|---|---|
| | |

Centre Number | Candidate Number

# Pearson Edexcel Level 1/Level 2 GCSE (9–1)

## Tuesday 18 June 2024

Morning (Time: 1 hour 45 minutes)

Paper reference **1DT0/1D**

# Design and Technology

## COMPONENT 1: Systems

**You must have:**
Calculator, ruler, HB pencil, protractor, pair of compasses

Total Marks

## Instructions

- Use **black** ink or ball-point pen.
- **Fill in the boxes** at the top of this page with your name, centre number and candidate number.
- Answer **all** questions.
- Answer the questions in the spaces provided – *there may be more space than you need.*
- Calculators may be used.
- Any diagrams may NOT be accurately drawn, unless otherwise indicated.
- You must **show all your working out** with **your answer clearly identified** at the **end of your solution**.

## Information

- The total mark for this paper is 100.
- The marks for **each** question are shown in brackets – *use this as a guide as to how much time to spend on each question.*

## Advice

- Read each question carefully before you start to answer it.
- Try to answer every question.
- Check your answers if you have time at the end.

*Turn over*


©2024 Pearson Education Ltd.
F:1/1/1/1/1/1/1/1

P 7 4 0 5 0 A 0 1 2 8

Pearson

## SECTION A

### Core

**Answer ALL questions. Write your answers in the spaces provided.**

**1** (a) The materials that products are made from are chosen because of their properties.

Figure 1 shows a table of products.

For each of the products shown, give a property of the material it is made from that makes the material suitable for the product.

The first one has been done for you.

| Picture of product | Material and product | Property |
|---|---|---|
| 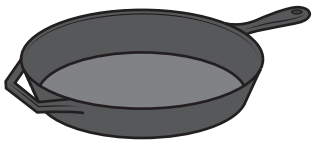 | Cast iron frying pan | Hard |
| 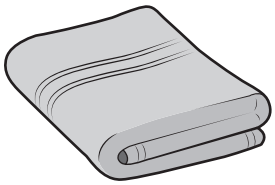 | Cotton bath towel | **(1)**<br>(i) ..... |
| | Polyester resin earrings | **(1)**<br>(ii) ..... |
| 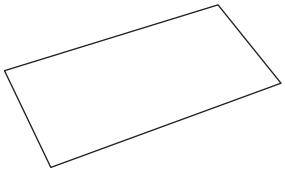 | Copier paper | **(1)**<br>(iii) ..... |
| 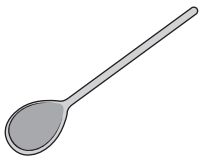 | Beech cooking spoon | **(1)**<br>(iv) ..... |

**Figure 1**

DO NOT WRITE IN THIS AREA
DO NOT WRITE IN THIS AREA
DO NOT WRITE IN THIS AREA

(b) (i) The frying pan is made from cast iron. Cast iron is hard, therefore it does not scratch easily.

Explain **one other** advantage of using cast iron for the frying pan.

**(2)**

.....

.....

.....

.....

(ii) Cast iron contains 2% carbon.

The cast iron frying pan weighs 3 kg.

Calculate how many grams of carbon are in the cast iron frying pan.

**(2)**

Answer ..... grams

**(Total for Question 1 = 8 marks)**

DO NOT WRITE IN THIS AREA
DO NOT WRITE IN THIS AREA
DO NOT WRITE IN THIS AREA

**2** Figure 2 shows a wooden sheep that is being threaded with a yarn.

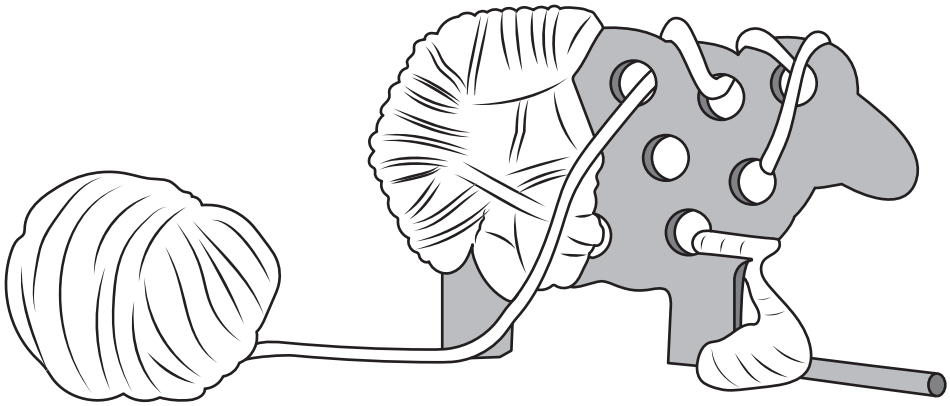

**Figure 2**

(a) Name **one** specific animal fibre that can be used to make the yarn being threaded in Figure 2.

**(1)**

.....

The wood that is used to manufacture the sheep is delivered to the manufacturer using vehicles powered by biofuels.

(b) Explain **one** advantage of using biofuels to power the delivery vehicles.

**(2)**

.....

.....

.....

.....

(c) Explain **one** advantage of using computer-aided design (CAD) when producing the design ideas for the wooden sheep.

**(2)**

.....

.....

.....

.....

DO NOT WRITE IN THIS AREA
DO NOT WRITE IN THIS AREA
DO NOT WRITE IN THIS AREA

A new animal shape needs to be designed.

The designer has collected some data about the popularity of specific animals amongst young children.

Figure 3 is a table of data showing the popularity of specific animals amongst young children.

| Animal | Number of votes | Percentage of votes (%) |
|---|---|---|
| Cat | 165 | 55 |
| Dog | 75 | 25 |
| Rabbit | ..... | 15 |
| Mouse | ..... | 5 |
| **Total** | 300 | 100 |

**Figure 3**

(d) (i) Complete Figure 3 above by calculating the **two** missing values.

**(2)**

**Space for working**

Number of votes for Rabbit .....

Number of votes for Mouse .....

DO NOT WRITE IN THIS AREA
DO NOT WRITE IN THIS AREA
DO NOT WRITE IN THIS AREA

Figure 4 is a partly completed bar chart that shows the percentage of votes received for the Cat and the Dog.

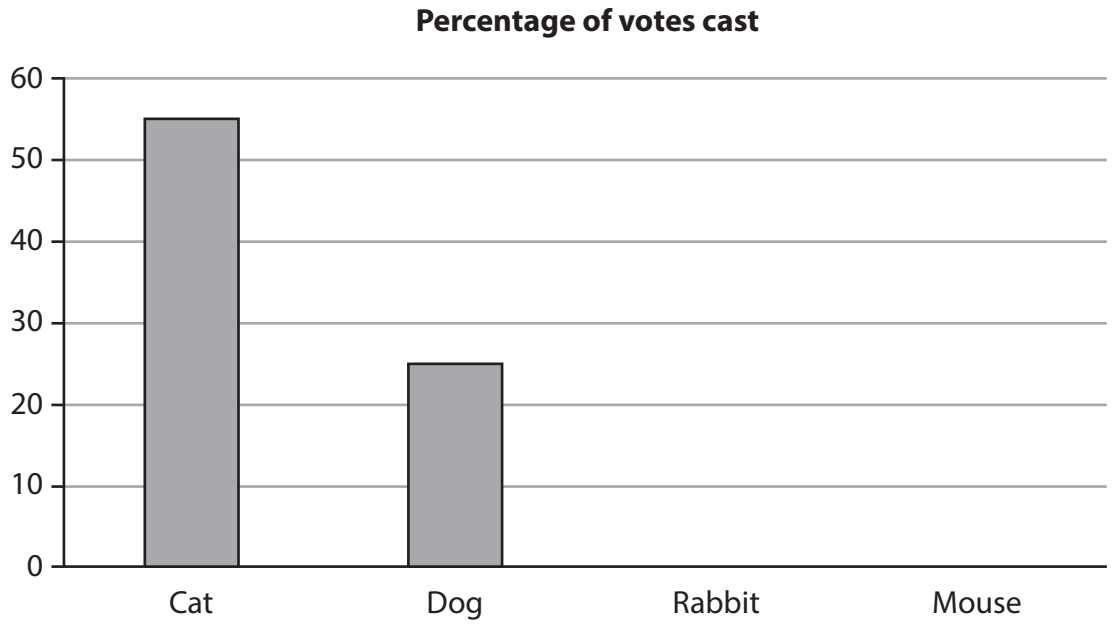


**Figure 4**

(ii) Complete the bar chart shown in Figure 4 to show the percentage of votes received for the Rabbit and the Mouse.

**(2)**

**(Total for Question 2 = 9 marks)**

DO NOT WRITE IN THIS AREA
DO NOT WRITE IN THIS AREA
DO NOT WRITE IN THIS AREA

DO NOT WRITE IN THIS AREA
DO NOT WRITE IN THIS AREA
DO NOT WRITE IN THIS AREA

**3** Figure 5 shows a pulley and pulley belt, a motor, and the cross section of the pulley belt used in a model boat drive system.

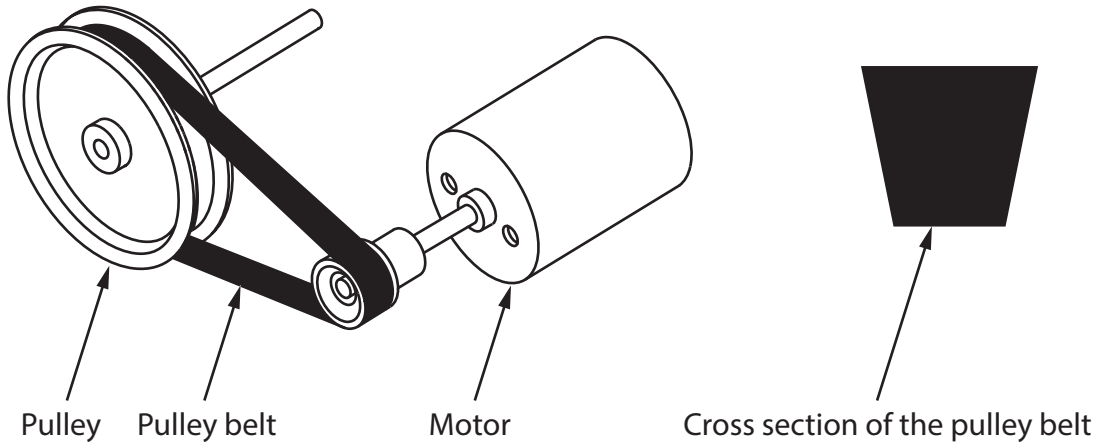


**Figure 5**

(a) Name the type of pulley belt shown in the cross section in Figure 5.

**(1)**

.....

(b) Explain **one** reason for manufacturing the pulley from aluminium rather than mild steel.

**(2)**

.....

.....

.....

.....

Figure 6 shows the pulley system for the model boat drive system.

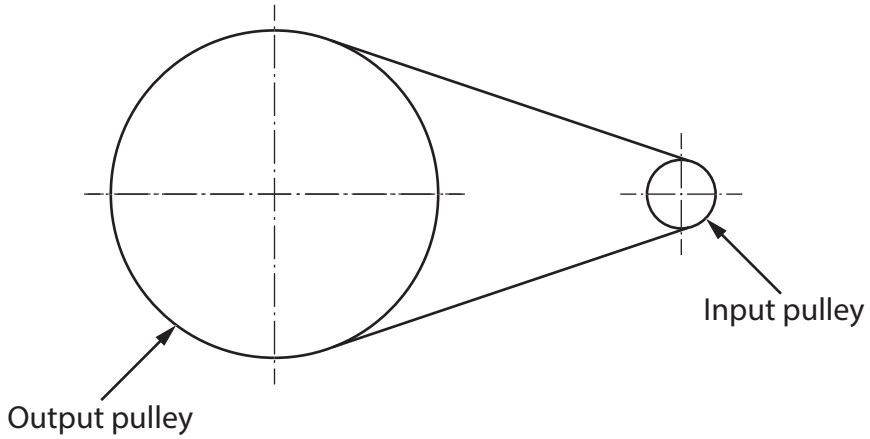


**Figure 6**

(c) The pulley system has a velocity ratio of 5:1.

The input speed is 2000 revolutions per minute (rpm).

Calculate the output speed of the pulley system.

Use the formula below to calculate the answer.

$$\text{Velocity ratio} = \frac{\text{input speed}}{\text{output speed}}$$

Give your answer in rpm.

**(2)**

Answer ..... rpm

DO NOT WRITE IN THIS AREA
DO NOT WRITE IN THIS AREA
DO NOT WRITE IN THIS AREA

The motor for the model boat is powered by the solar cell shown in Figure 7.

The solar cell is 5 cm by 5 cm.

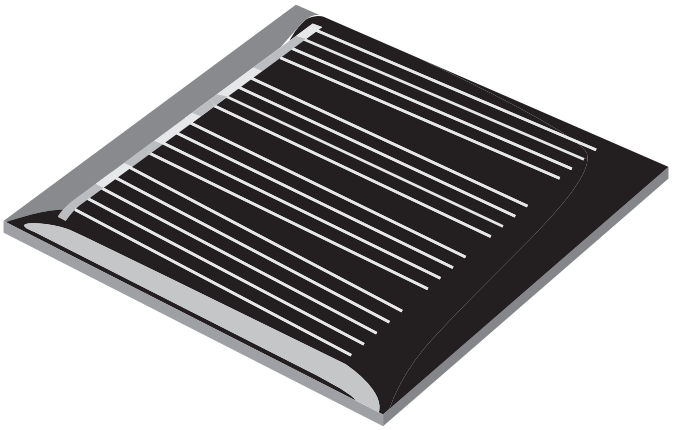

**Figure 7**

(d) Explain **one** disadvantage of using the solar cell to power the motor for the model boat.

**(2)**

.....

.....

.....

.....

DO NOT WRITE IN THIS AREA
DO NOT WRITE IN THIS AREA
DO NOT WRITE IN THIS AREA

Figure 8 shows the frame for the model boat.

The model boat has been manufactured from balsa wood.

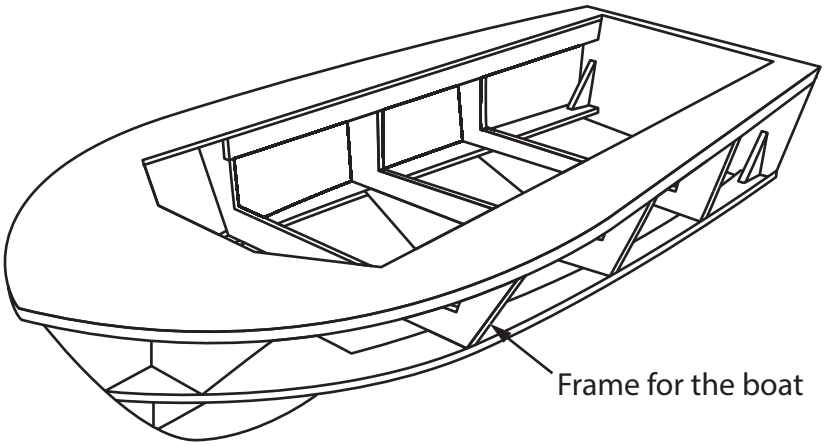


**Figure 8**

(e) Explain **two** benefits of using balsa wood for the frame of the model boat.

**(4)**

1 .....

.....

.....

.....

2 .....

.....

.....

.....

**(Total for Question 3 = 11 marks)**

DO NOT WRITE IN THIS AREA
DO NOT WRITE IN THIS AREA
DO NOT WRITE IN THIS AREA

**4** (a) Explain **two** ways that conductive inks can be used in products.

**(4)**

1 .....

.....

.....

.....

2 .....

.....

.....

.....

(b) A small batch of conductive ink weighs 9 grams.

The ink contains 40% of hazardous material by weight.

Calculate the weight of hazardous material present in the ink in grams.

**(2)**

Answer ..... grams

DO NOT WRITE IN THIS AREA
DO NOT WRITE IN THIS AREA
DO NOT WRITE IN THIS AREA

(c) Discuss how designers can minimise the environmental impact of materials when developing new and emerging technologies.

**(6)**

DO NOT WRITE IN THIS AREA
DO NOT WRITE IN THIS AREA
DO NOT WRITE IN THIS AREA

**(Total for Question 4 = 12 marks)**

**TOTAL FOR SECTION A = 40 MARKS**

DO NOT WRITE IN THIS AREA
DO NOT WRITE IN THIS AREA
DO NOT WRITE IN THIS AREA

## SECTION B

### Systems

**Answer ALL questions. Write your answers in the spaces provided.**

**5** Figure 9 shows a design solution for a soldering iron rack to hold three cordless soldering irons, together with some additional information.

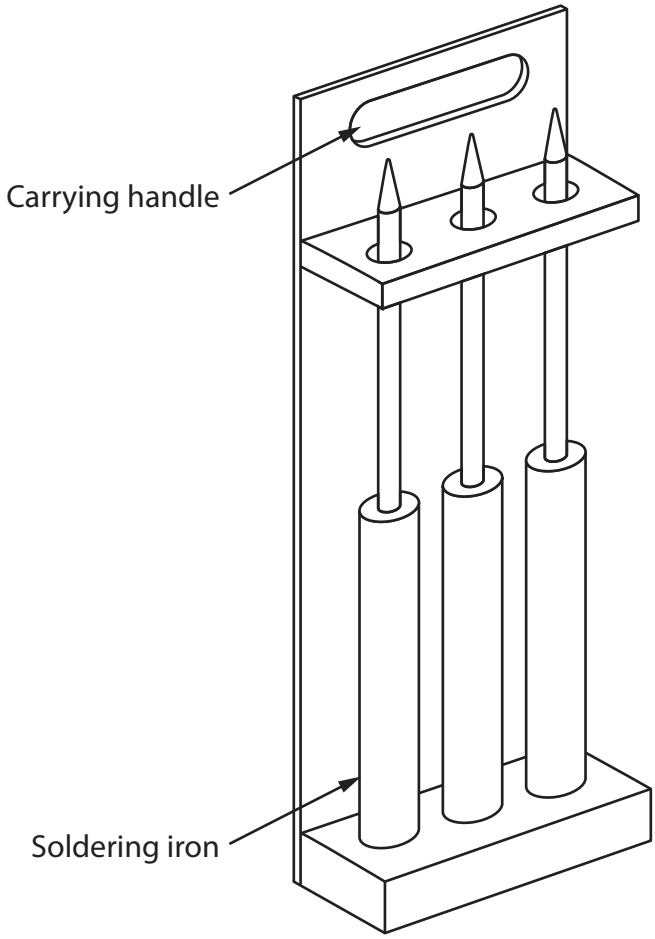


Additional information – dimensions of soldering irons

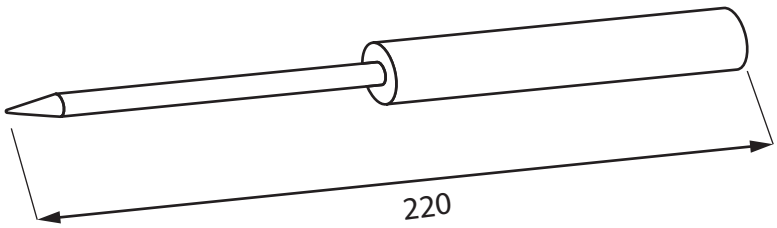


All dimensions in mm

Diagram not to scale

**Figure 9**

DO NOT WRITE IN THIS AREA
DO NOT WRITE IN THIS AREA
DO NOT WRITE IN THIS AREA

(a) The soldering iron rack holds three cordless soldering irons and needs to be improved to include the following specification points.

The soldering iron rack must:

- be able to hold an additional three cordless soldering irons and stop the soldering irons from moving as the rack is carried around a workshop
- protect the user from potential burns when carrying the rack and have an indicator to show if the soldering irons are still hot
- be more stable when placed on a bench and be capable of being hung up on a wall.

Use notes and sketches to show how the soldering iron rack could be modified to include these three specification points.

You will be marked on how you apply your understanding of design and technology, not your graphical skills.

Use the outline of the original design solution to show your modifications.

**(6)**

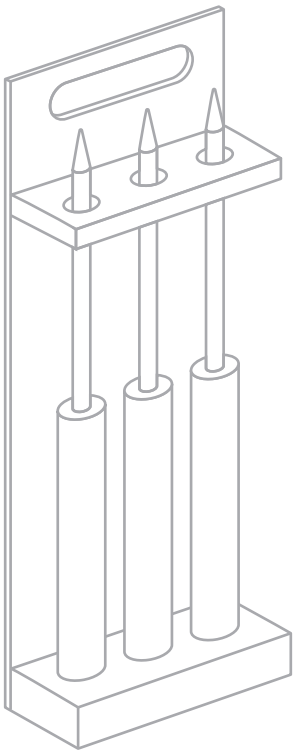

DO NOT WRITE IN THIS AREA
DO NOT WRITE IN THIS AREA
DO NOT WRITE IN THIS AREA

(b) Figure 10 shows a food play set manufactured from a polymer. The toy fruits have LEDs that only light up when the correct two halves of the fruit are joined.

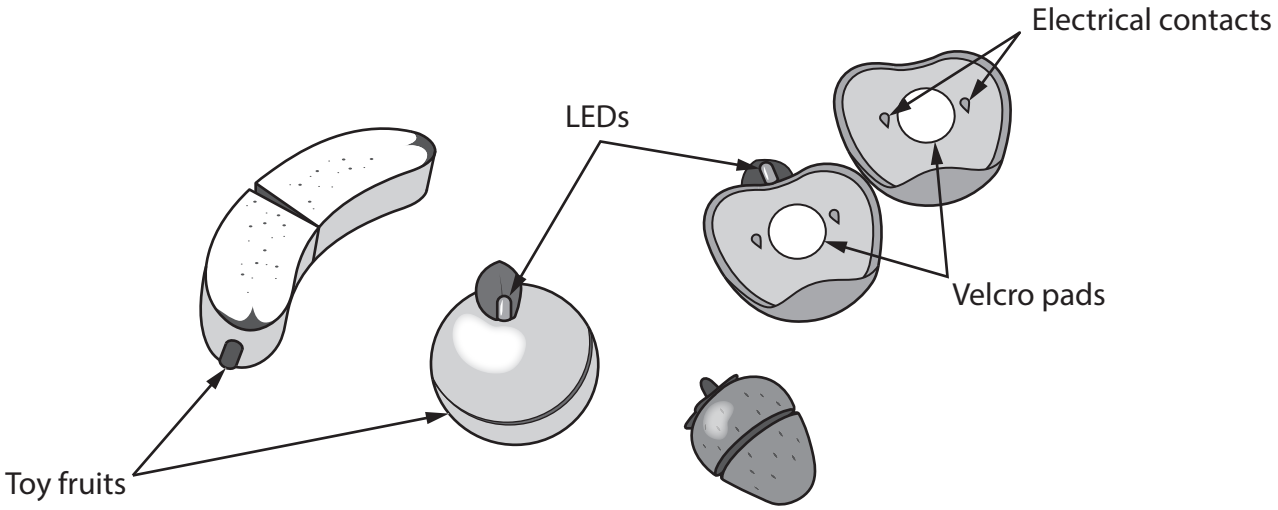


**Figure 10**

Explain **two** ways that the food play set meets, or fails to meet, the criterion of providing a method to educate young children about healthy eating.

**(4)**

1 .....

.....

.....

.....

2 .....

.....

.....

.....

**(Total for Question 5 = 10 marks)**

DO NOT WRITE IN THIS AREA
DO NOT WRITE IN THIS AREA
DO NOT WRITE IN THIS AREA

**6** Figure 11 shows a house-shaped casing for an LED nightlight.

The LEDs are part of an insert fixed to the body of the house.

The main body of the house and the insert have been manufactured from acrylic and the roof has been manufactured from high impact polystyrene.

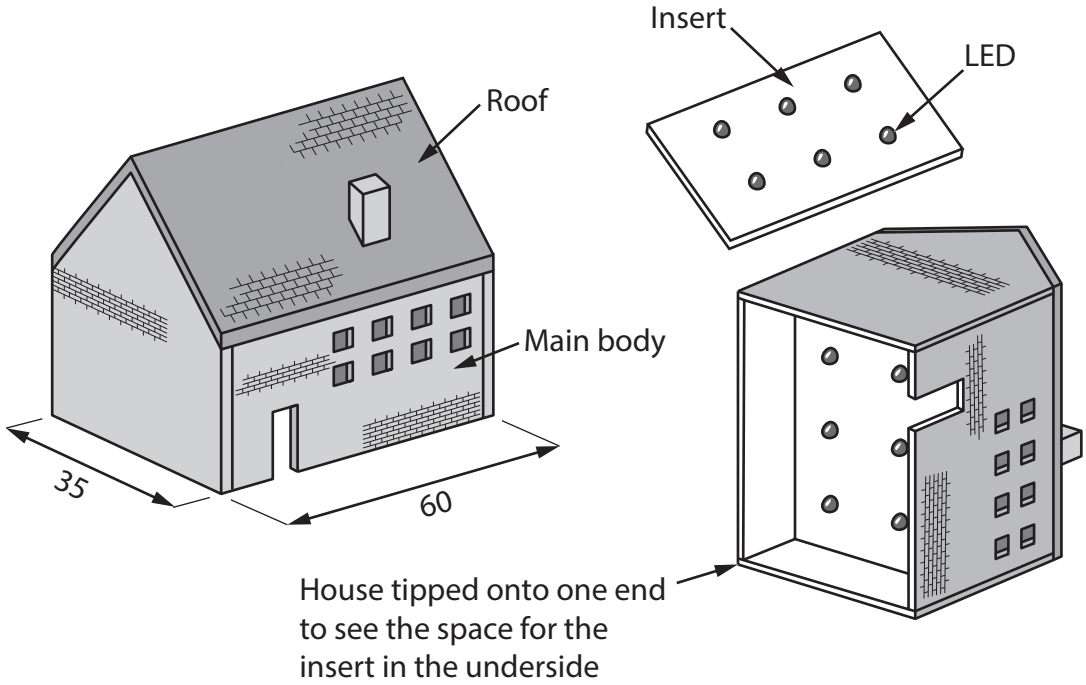


All dimensions in mm

Diagram not to scale

**Figure 11**

The polymer house has been finished with a screen printed brick and tile finish.

(a) Explain **two** reasons for using screen printing to apply a brick and tile finish to the polymer house.

**(4)**

1 .....

.....

.....

.....

2 .....

.....

.....

.....

DO NOT WRITE IN THIS AREA
DO NOT WRITE IN THIS AREA
DO NOT WRITE IN THIS AREA

(b) Figure 12 shows a dimensioned drawing of a marked-out piece of acrylic ready to be drilled so that the 5 mm diameter LEDs can be inserted.

The acrylic is 3 mm thick and is cut from a 29 mm wide strip.

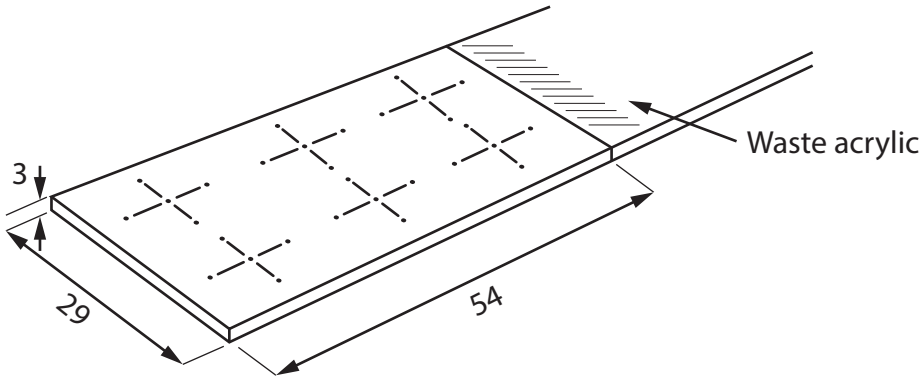


All dimensions in mm

Diagram not to scale

**Figure 12**

Use notes and sketches, in the space below, to show how the holes for the LEDs would be produced using hand tools.

You will be marked on how you apply your understanding of design and technology, not your graphical skills.

**(4)**

DO NOT WRITE IN THIS AREA
DO NOT WRITE IN THIS AREA
DO NOT WRITE IN THIS AREA

(c) Explain **one** working property of acrylic that makes it an ideal material for the main body of the house.

**(2)**

.....

.....

.....

.....

DO NOT WRITE IN THIS AREA
DO NOT WRITE IN THIS AREA
DO NOT WRITE IN THIS AREA

Figure 13 shows a dimensioned side view of one of the end pieces of acrylic for the main body of the house.

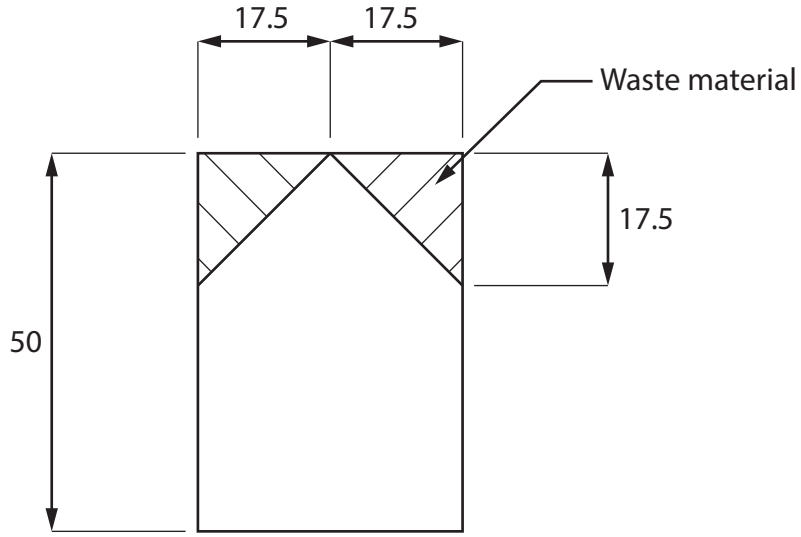


All dimensions in mm

Diagram not to scale

**Figure 13**

(d) Give **two** different manufacturing methods that could be used to remove the waste material to form the roof shape as shown in Figure 13.

Explain **one** reason for using each manufacturing method.

**(6)**

Method 1

.....

Explanation

.....

.....

.....

Method 2

.....

Explanation

.....

.....

.....

**(Total for Question 6 = 16 marks)**

DO NOT WRITE IN THIS AREA
DO NOT WRITE IN THIS AREA
DO NOT WRITE IN THIS AREA

**7** Figure 14 shows a child's ride-on buggy.

The buggy has a siren and lighting unit that fits to the handlebars. The casing is manufactured from acrylonitrile butadiene styrene (ABS).

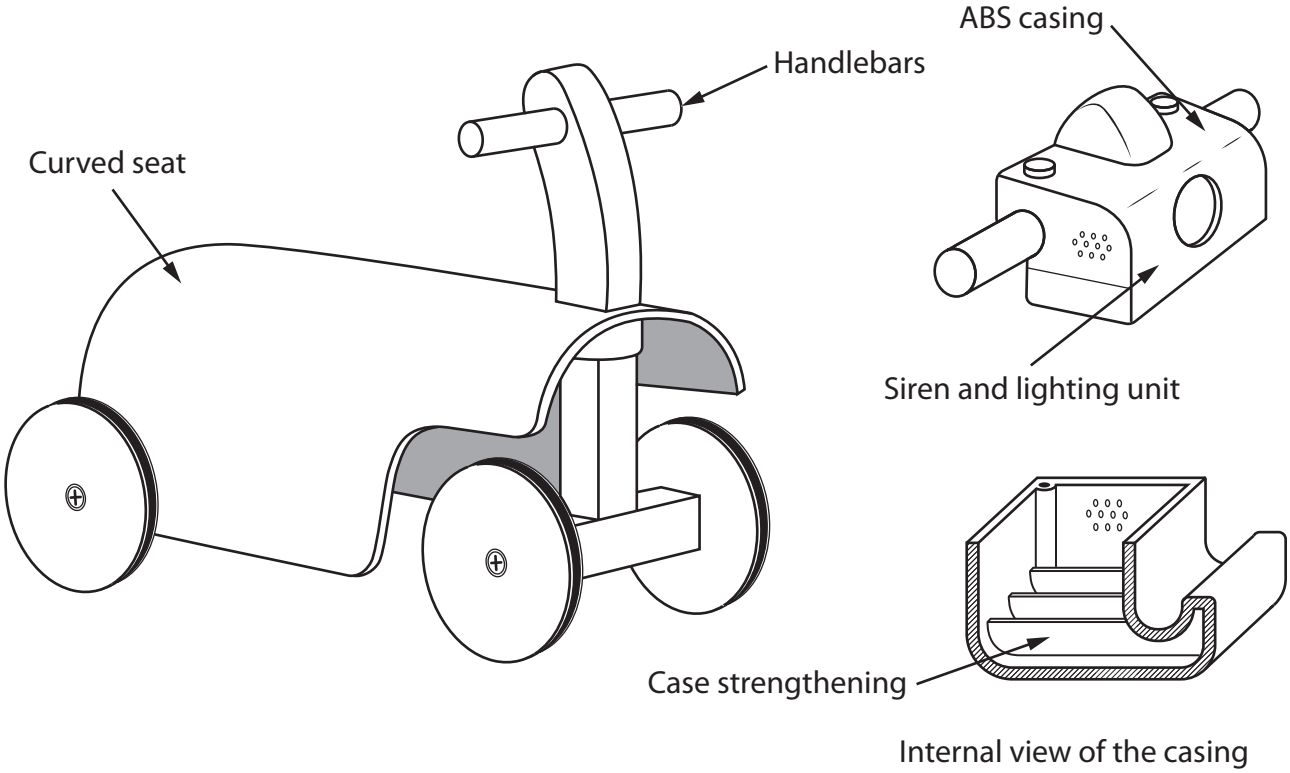


**Figure 14**

(a) Name the specific technique that has been used to strengthen the casing shown in Figure 14.

**(1)**

.....

DO NOT WRITE IN THIS AREA
DO NOT WRITE IN THIS AREA
DO NOT WRITE IN THIS AREA

(b) Explain **two** working properties of ABS that make it an ideal material for the casing.

**(4)**

1 .....

.....

.....

.....

2 .....

.....

.....

.....

DO NOT WRITE IN THIS AREA
DO NOT WRITE IN THIS AREA
DO NOT WRITE IN THIS AREA

Figure 15 shows a dimensioned drawing of one of the sheets for the curved seat before it is cut into shape.

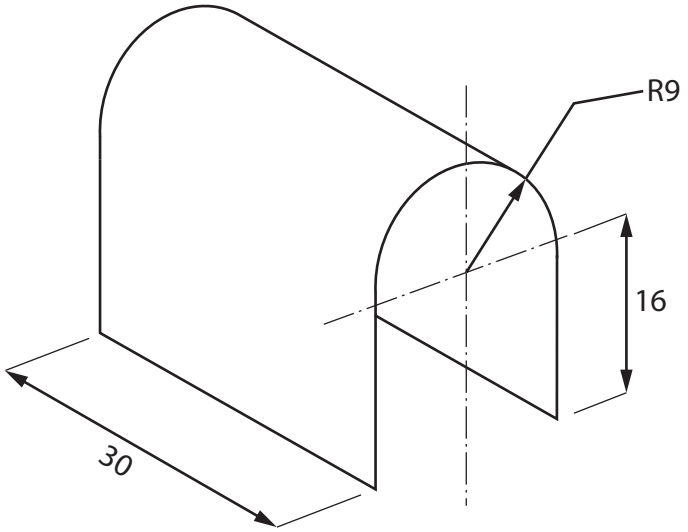


All dimensions in cm

Diagram not to scale

**Figure 15**

Circumference of a circle = $\pi D$

Use $\pi = 3.142$

(c) Calculate how many of the curved seats shown in Figure 15 can be cut from a large flat sheet that measures 244 cm × 122 cm.

Ignore the width of any saw cuts.

**(5)**

Answer .....



DO NOT WRITE IN THIS AREA
DO NOT WRITE IN THIS AREA
DO NOT WRITE IN THIS AREA

(d) Figure 16 shows an internal view of the casing for the siren and lighting unit.

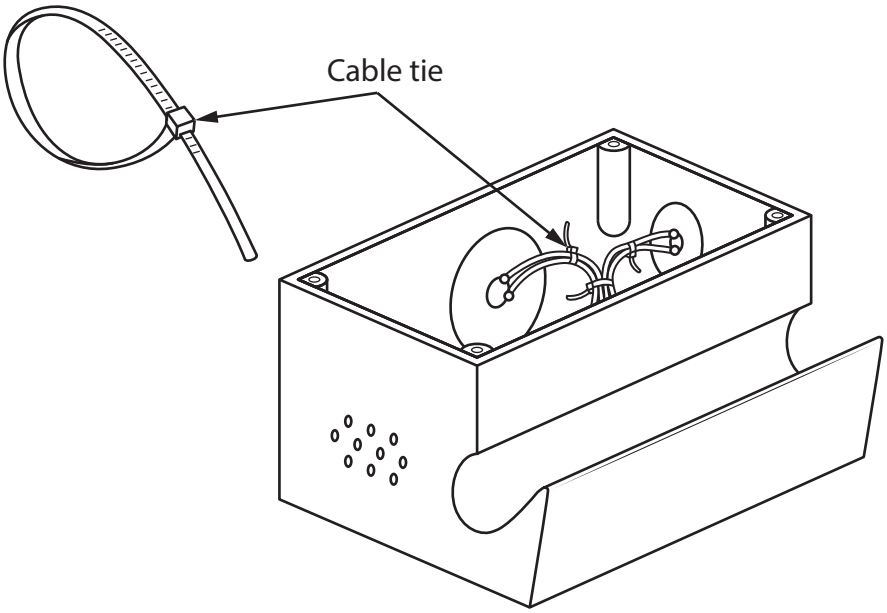


**Figure 16**

Explain **two** advantages of using cable ties as a method of cable management inside the casing.

**(6)**

1 .....

.....

.....

.....

.....

.....

2 .....

.....

.....

.....

.....

.....

**(Total for Question 7 = 16 marks)**

DO NOT WRITE IN THIS AREA
DO NOT WRITE IN THIS AREA
DO NOT WRITE IN THIS AREA

**8** Figure 17 shows a partly exploded drawing of a light-emitting diode (LED) strip light.

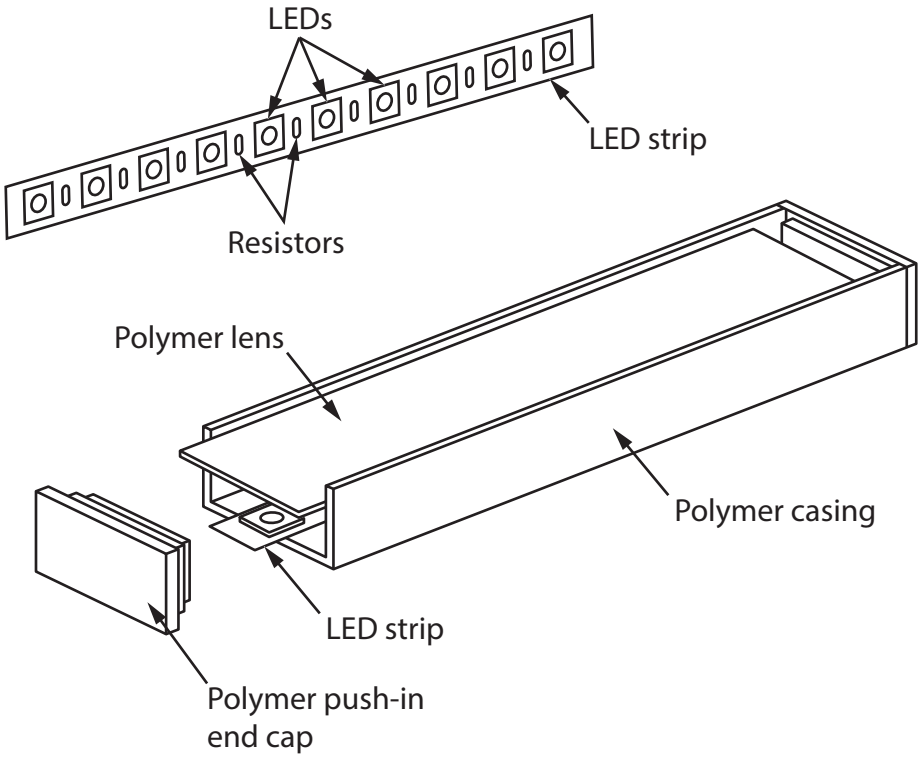


**Figure 17**

Manufacturing the strip light using LEDs is cost effective.

(a) Explain **one other** benefit of manufacturing the strip light using LEDs.

**(2)**

.....

.....

.....

.....

(b) Explain **one** advantage of using surface-mount technology (SMT) for the LEDs.

**(3)**

.....

.....

.....

.....

DO NOT WRITE IN THIS AREA
DO NOT WRITE IN THIS AREA
DO NOT WRITE IN THIS AREA

(c) Explain **two** ways that pick and place technology can be used to aid the manufacture of the LED strip lights.

**(4)**

1 .....

.....

.....

.....

2 .....

.....

.....

.....

DO NOT WRITE IN THIS AREA
DO NOT WRITE IN THIS AREA
DO NOT WRITE IN THIS AREA

(d) The LED strip lights are manufactured in the United Kingdom and sold around the world.

Figure 18 shows some additional information about the LED strip lights.

| | |
|---|---|
| **Source of polymer for the strip light** | USA |
| **Country of manufacture** | United Kingdom |
| **Potential market** | Homes, schools and museums |
| **Scale of production** | Batch |

**Figure 18**

Analyse the information in Figure 18.

Evaluate the LED strip lights with reference to cost factors including:

- quality of components
- manufacturing processes necessary
- use of stock materials.

**(9)**

.....

.....

.....

.....

.....

.....

.....

.....

.....

.....

.....

.....

.....

DO NOT WRITE IN THIS AREA
DO NOT WRITE IN THIS AREA
DO NOT WRITE IN THIS AREA

**(Total for Question 8 = 18 marks)**

**TOTAL FOR SECTION B = 60 MARKS**
**TOTAL FOR PAPER = 100 MARKS**

DO NOT WRITE IN THIS AREA
DO NOT WRITE IN THIS AREA
DO NOT WRITE IN THIS AREA